LEBRON INFOTECH FZ-LLC

Double Channel Loop Detector

This is a double channel inductive loop detector designed for parking and access control applications.

The detector is connected to an inductive loop mounted in the road surface. When vehicles pass over the loop the detector switches on an output.

The use of microprocessor and surface mount technology enables a large number of functions to be incorporated into a small package. This is compatible with most double channel detectors on the market and is easy to set-up and install.

Applications

Typical applications in the parking and access control environments are safety loops for barriers or gates, arming loops for activating card dispensers, entry or exit loops and vehicle counting.

Features

Reset Switch. Pressing the reset switch enables the detector to be manually reset during commissioning and testing. This results in the detector re-tuning the sensing loop and becoming ready for vehicle detection.

Switch selectable Sensitivity. The detect sensitivity is the minimum change in inductance required to produce a detect output. (%ΔL/L). Eight sensitivity settings are available on the switches to allow flexibility in configuration.

Sensitivity Boost. This feature sets the undetect level to maximum sensitivity and is used to prevent loss of detection of high-bed vehicles.

Filter Option. This option is used to provide a delay of 2 Seconds between detection of the vehicle and switching of the output relay. This delay is normally used to prevent false detection of small or fast moving objects.

Extend Option. When switched on this feature extends the presence output relay for 2 Seconds after the vehicle has left the loop.

Permanent Presence. This feature ensures detection of the vehicle will be maintained when the vehicle is parked over the loop for extended periods.

Pulse Relay Selection. The Pulse relay may be configured to energise on detection of a vehicle or to energise when the vehicle leaves the loop.

Selectable Pulse Time. This feature sets the length of time that the pulse relay will be energised. 1 Second or 0.2 Second.

Indicators

Power Indicator. This LED Indicator illuminates when power is present.

Detect Indicator. This LED Indicator is illuminated when there is a vehicle over the loop or the loop is faulty. This LED can also be used to determine the loop frequency. On reset, count the number of times the LED flashes. Multiply this number by 10KHz.For example: if the LED flashes 6 times, then the loop frequency is between 60KHz and 70KHz.

Loop Fault Indicator. This LED Indicator is illuminated when the loop is either open circuit or short circuit and is used to give a visual indication of a faulty loop.

Technical Specifications

Power supply	**LD100** 200 - 260VAC 50Hz 1.5VA **LD101** 100 - 120VAC 60Hz 1.5VA
	LD102 11 - 26VAC/DC 50/60Hz 95mA max.
Presence Relay	Change over contact 0.5A/220VAC (Fail Safe – normally energized)
Pulse Relay	Change over contact 0.5A/220VAC(Non Fail Safe–normally denergised)
Response time	Approximately 120ms after vehicle enters loop.
Indicators	LED indicators show: Power, Detect state and Loop Fault.
Detector tuning range	15 - 1500uH
Loop Frequency	Approx. 23 – 130KHz
Power Fail Memory	20 Seconds
Environmental tracking	Automatic Compensation
Protection	Loop isolation transformer with zener diodes and gas discharge tube.
Connector	11 Pin Connector on rear of unit.
Dimensions	80mm (height) X 40mm (width) X 79mm (Depth excl. connector).
Operating Temperature	-40°C to +80°C
Storage Temperature	-40°C to +85°C
Country of Origin	UAE

Switch Settings

LD100 Switch Settings			
Switch No.	**Function**	**ON**	**OFF**
10	Presence Relay Extend Time	2 Sec	Off
7,8,9	Sensitivity 0.02%	-	S7/S8/S9
7,8,9	Sensitivity 0.01%	S9	S7/S8
7,8,9	Sensitivity 0.05%	S8	S7/S9
7,8,9	Sensitivity 0.1%	S8/S9	S7
7,8,9	Sensitivity 0.2%	S7	S8/S9
7,8,9	Sensitivity 0.5%	S7/S9	S8
7,8,9	Sensitivity 1%	S7/S8	S9
7,8,9	Sensitivity 2%	S7/S8/S9	-
6	Frequency	Low	High
5	ASB	On	Off
4	Filter	2 Sec	Off
3	Permanent Presence	On	Off
2	Pulse Mode	Undetect	Detect
1	Pulse Time	1 Sec	0.2 Sec

Relay Functionality

RELAYS		**VEHICLE PRESENT**	**NO VEHICLE**	**LOOP FAULTY**	**NO POWER**
PRESENCE RELAY	**N/O**	**CLOSED**	**OPEN**	**CLOSED**	**CLOSED**
	N/C	**OPEN**	**CLOSED**	**OPEN**	**OPEN**
PULSE RELAY	**N/O**	**PULSE CLOSED**	**OPEN**	**OPEN**	**OPEN**
	N/C	**PULSE OPEN**	**CLOSED**	**CLOSED**	**CLOSED**

Diagnostics

SYMPTOM	POSSIBLE CAUSE	SOLUTION
The POWER LED is not on.	No power supply voltage on the input.	Check that the power supply is correctly wired to the detector. (PINS 1 and 2)
The DETECT LED flashes erratically.	There may be a poor connection in the loop or loop feeder. The detector may be experiencing crosstalk with the loop of an adjacent detector.	Check all wiring. Tighten screw terminals. Check for broken wires. Try changing frequencies using the frequency switch. Put the detector with the larger loop onto low frequency and the detector with the smaller loop onto high frequency.
The DETECT LED randomly stays on.	Faulty loop or loop feeder wiring. Movement of the loop in the ground.	Check the wiring. Tighten screw terminals. Check for pinched or bent wires. Is the feeder wire twisted? Check for cracks in the road surface near the loop.
The LOOP FAULT LED is flashing.	The loop inductance is to small or the loop is short circuit.	Check that there is no short circuit on the loop feeder wiring or the loop. If there is no short circuit then the inductance is to small and more turns of wire should be added to the loop.
The LOOP FAULT LED is permanently illuminated.	The loop inductance is too large or the loop is open circuit.	Check that there is electrical continuity on the loop. This can be done using a multimeter on the ohms range (< 5 Ω). If the loop inductance is too large then try reducing the number of turns.

Wiring Diagram

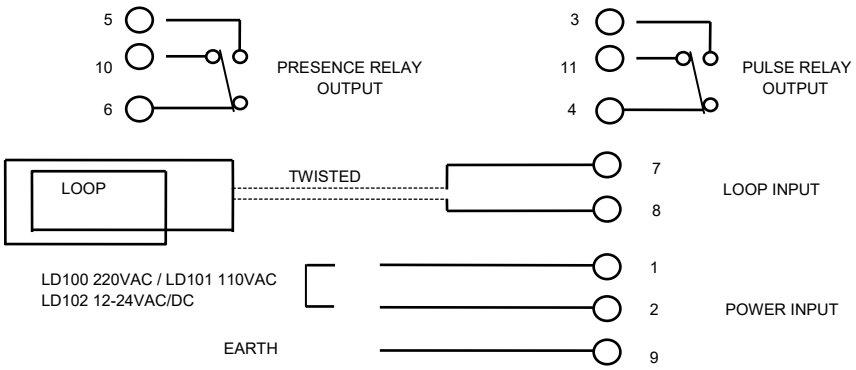

Loop Installation Guide

1. The detector should be installed in a waterproof housing as close to the loop as possible.
2. The loop and feeder should be made from insulated copper wire with a minimum cross-sectional area of 1.5mm^2. The feeder should be twisted with at least 20 turns per metre. Joints in the wire are not recommended and must be soldered and made waterproof. Faulty joints could lead to incorrect operation of the detector. Feeders which may pick up electrical noise should use screened cable, with the screen earthed at the detector.
3. The loop should be either square or rectangular in shape with a minimum distance of 1 metre between opposite sides. Normally 3 turns of wire are used in the loop. Large loops with a circumference of greater than 10 metres should use 2 turns while small loops with a circumference of less than 6 metres should use 4 turns. When two loops are used in close proximity to each other it is recommended that 3 turns are used in one and 4 turns in the other to prevent cross-talk.
4. Cross-talk is a term used to describe the interference between two adjacent loops. To avoid incorrect operation of the detector, the loops should be at least 2 metres apart and on different frequency settings.
5. For loop installation, slots should be cut in the road using a masonry cutting tool. A 45° cut should be made across the corners to prevent damage to the wire on the corners. The slot should be about 4mm wide and 30mm to 50mm deep. Remember to extend the slot from one of the corners to the road-side to accommodate the feeder.
6. Best results are obtained when a single length of wire is used with no joints. This may be achieved by running the wire from the detector to the loop, around the loop for 3 turns and then back to the detector. The feeder portion of the wire is then twisted. Remember that twisting the feeder will shorten its length, so ensure a long enough feeder wire is used.
7. After the loop and feeder wires have been placed in the slot, the slot is filled with epoxy compound or bitumen filler.

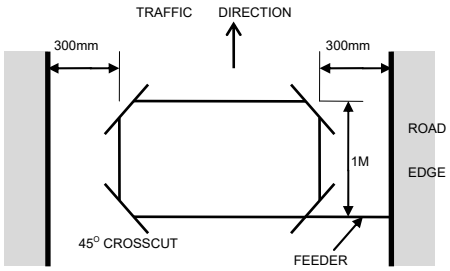

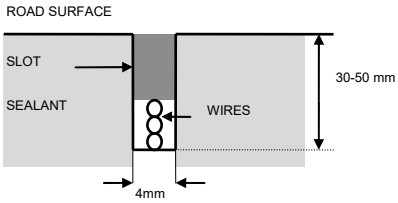

LD100 Configuration

1. Connect the wiring according to the pin-out on the side label of the detector.

1.1 Connect the power supply to the terminals 1 & 2.

1.2 Connect the loop to the terminals 7 & 8.

1.3 Connect the relay outputs as required. The relays are fail safe and the normally open/normally closed contacts are indicated with the detector switched on and tuned to the loop, with no vehicle on the loop.

2. The next step is setting the 10 way switch on the front of the unit.

2.1 The Extend switch (10) is used to keep the presence relay switched on for a short period after the vehicle has left the loop. This is used to prevent the detector from giving a false undetect. This switch is normally off.

2.2 Set up the desired sensitivity on switches 7, 8 and 9. The settings can be seen on the side label. For normal operation of 0.02% switch off switches 7, 8 and 9.

2.3 The frequency switch 6 is used to change the loop frequency. If the loop detector is experiencing interference from an adjacent detector (crosstalk) or from another source, the problem can be eliminated by switching this switch on. For normal operation this switch can be off.

2.4 The ASB switch (5) is used to boost the undetect sensitivity level. For example if the sensitivity is set to 1%, then the undetect level will be 0.5% with the ASB switch off and 0.02% with the ASB switch on. Try leaving this switch off where possible. This is used to ensure high bed trucks stay in detect when the rear section of the truck is over the loop.

2.5 The filter switch (4) is used to delay the switching ON of the detector when a vehicle moves onto the loop. This switch is normally off.

2.6 The permanent presence switch (3) is used when the loop detector must detect a vehicle for days at a time. For example in a parking bay. Keep this switch off for normal use.

2.7 The pulse mode switch (2) is used to configure the pulse relay. When this switch is switched off the pulse relay will pulse on and off when a vehicle enters the loop. When this switch is switched on the pulse relay will pulse on and off when a vehicle leaves the loop.

2.8 The pulse time switch (1) is used to extend the duration of the pulse relay. This switch is normally left off. When switched off the pulse duration is 0.2 seconds and when the switch is on the pulse duration is 1 second.

To conclude the switch setting, all the switches can normally be left in the off position. ie: all of the switches are toward the outside edge of the detector.

Powering up and testing the LD100

1. Switch on the power and observe the lights on the front of the detector.
2. The top light is an indication of power. This light must always be on.
3. The middle light indicates if there is a vehicle present on the loop. When the power is first applied to the detector this light flashes a couple of times indicating that the detector has tuned to the loop. The number of flashes indicates the frequency of the oscillator multiplied by 10 KHz (Kilohertz). For example, 7 flashes indicates that the loop frequency is between 70 and 80 KHz. If this light does not flash and stays on there is a problem with the loop or wiring.
4. The bottom light comes on if there is a problem with the loop. Some of the common problems are:
    a. The loop wires have a short circuit. Check the wiring.
    b. The loop inductance is too small. More turns must be added to the loop. For a 2m by 1m loop 3 turns is suitable. A wire size of 1.5mm^2 cross sectional area is recommended.
    c. The loop inductance is too big. This is very seldom a problem as most loops have an inductance of less than 500uH. A solution is to reduce the number of turns on the loop.
    d. The loop is open circuit. Check the wiring.

If the fault light is on it is easy to identify that there is a fault with the loop or wiring and this can easily be repaired. If the detector is erratic the problem may be more difficult to find. The first step is to check the loop wiring. Many intermittent problems can be attributed to poor wiring connections and even movement in the loop. The next step is to switch on the frequency switch to change the loop frequency, and finally it may be necessary reduce the loop sensitivity by switching on switch 7 or 8.

Care must be given to the placement of the loop. The loop should not be put below reinforcing mesh, should be kept away from any metal objects such as a manhole and should also not be too close to sliding gates, etc.

Contact Details

LEBRON INFOTECH FZ-LLC

CONTACT US
Business Center RAKEZ, Ras Al Khamirah, United Arab Emirates.

Phone: +971523819594
Email: lebroninfotech@gmail.com